ZONE	CHK'D	DATE	REV	ECN	CHANGE OR ADDITION

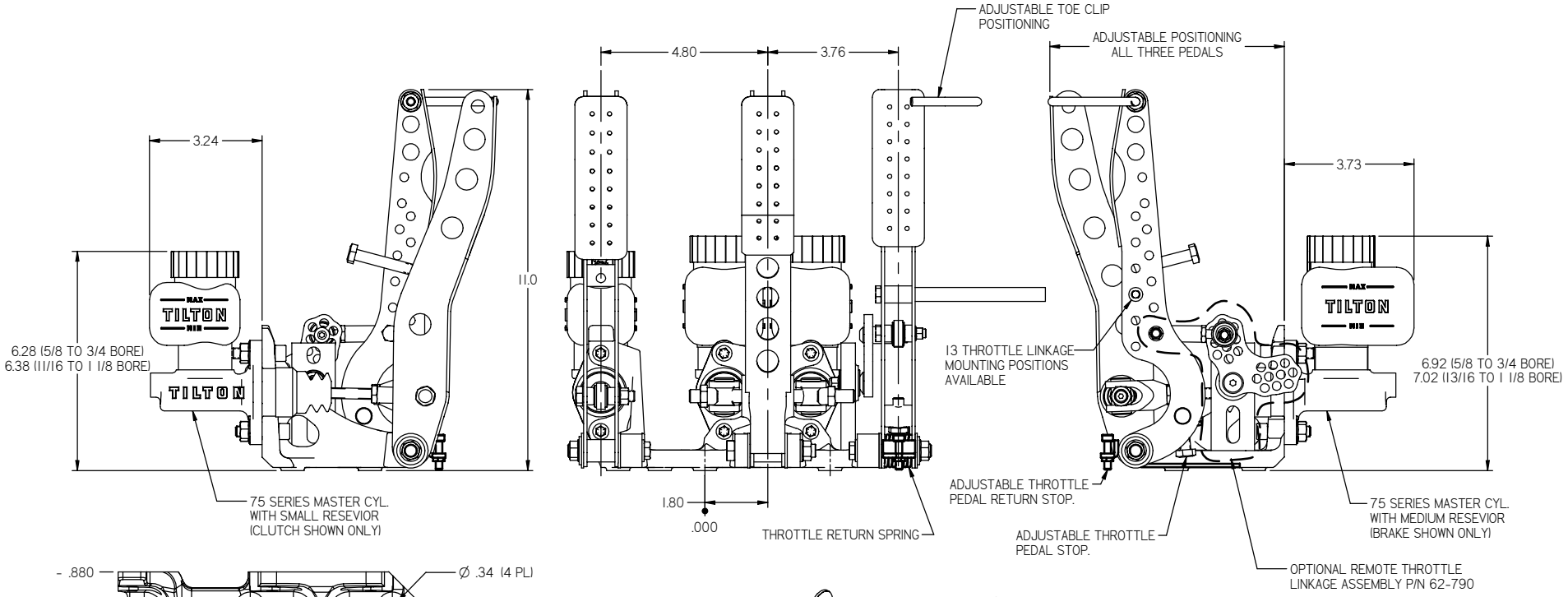

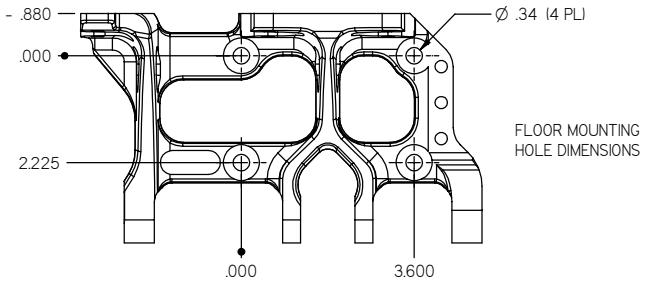

FLOOR MOUNTING HOLE DIMENSIONS

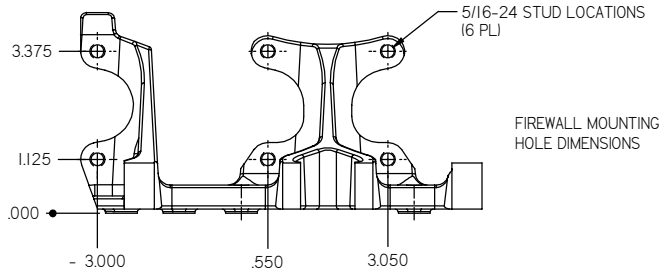

FIREWALL MOUNTING HOLE DIMENSIONS

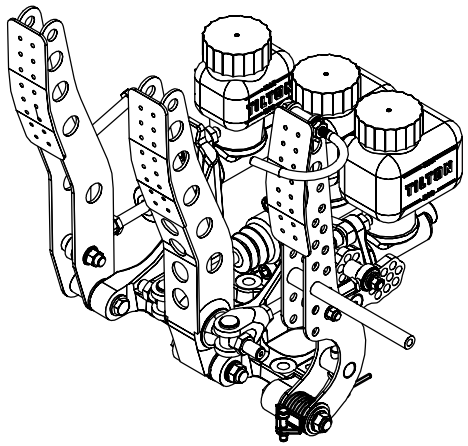

NOTES:

1. UNLESS OTHERWISE SPECIFIED DIMENSION ARE IN INCHES.
2. DIMENSIONS ARE NOMINAL.
3. PEDALS ARE IN RELAXED POSITION.
4. MASTER CYLINDERS ARE NOT INCLUDED WITH PEDAL ASSEMBLIES.
5. BALANCE BAR ASSEMBLY INCLUDED WITH PEDALS.

TOLERANCES: UNLESS SPECIFIED OTHERWISE

		DRILL HOLES
.X ±	.020	.013-.040 +.001/-.001
.XX ±	.010	.041-.130 +.002/-.001
.XXX ±	.005	.131-.229 +.003/-.001
FRACT ±	1/32	.230-.500 +.004/-.001
ANGLE ±	1/2°	.501-.750 +.005/-.001
CONC(TIR)	.005	.751-1.000 +.007/-.001
		1.001-2.000 +.010/-.001

MAT'L	
SPEC	
COND	
HARD	
FINISH	
SPEC	

TILTON ENGINEERING, INC. (805)688-2353 FAX (805)688-2745
25 EASY STREET P.O. BOX 1787 BUELLTON, CALIFORNIA 93427 USA

TITLE: FLOOR MOUNT PEDAL ASSEMBLY W/ THROTTLE
WITH STEEL BRAKE, CLUTCH AND THROTTLE PEDALS

DRN BY	PUCKETT	CHK'D	O'NEIL	SCALE:	NONE	DWG	4702
P/N	72-680	DATE	11/13/03	SHEET 1 OF	1		

"This document contains proprietary information of TILTON ENGINEERING, INC., and its receipt or possession does not convey the rights to reproduce, disclose its contents, or to manufacture, use or sell anything it may describe. Reproduction, disclosure, or use without specific written authorization of TILTON ENGINEERING, INC. is strictly forbidden."

tilton ENGINEERING INC